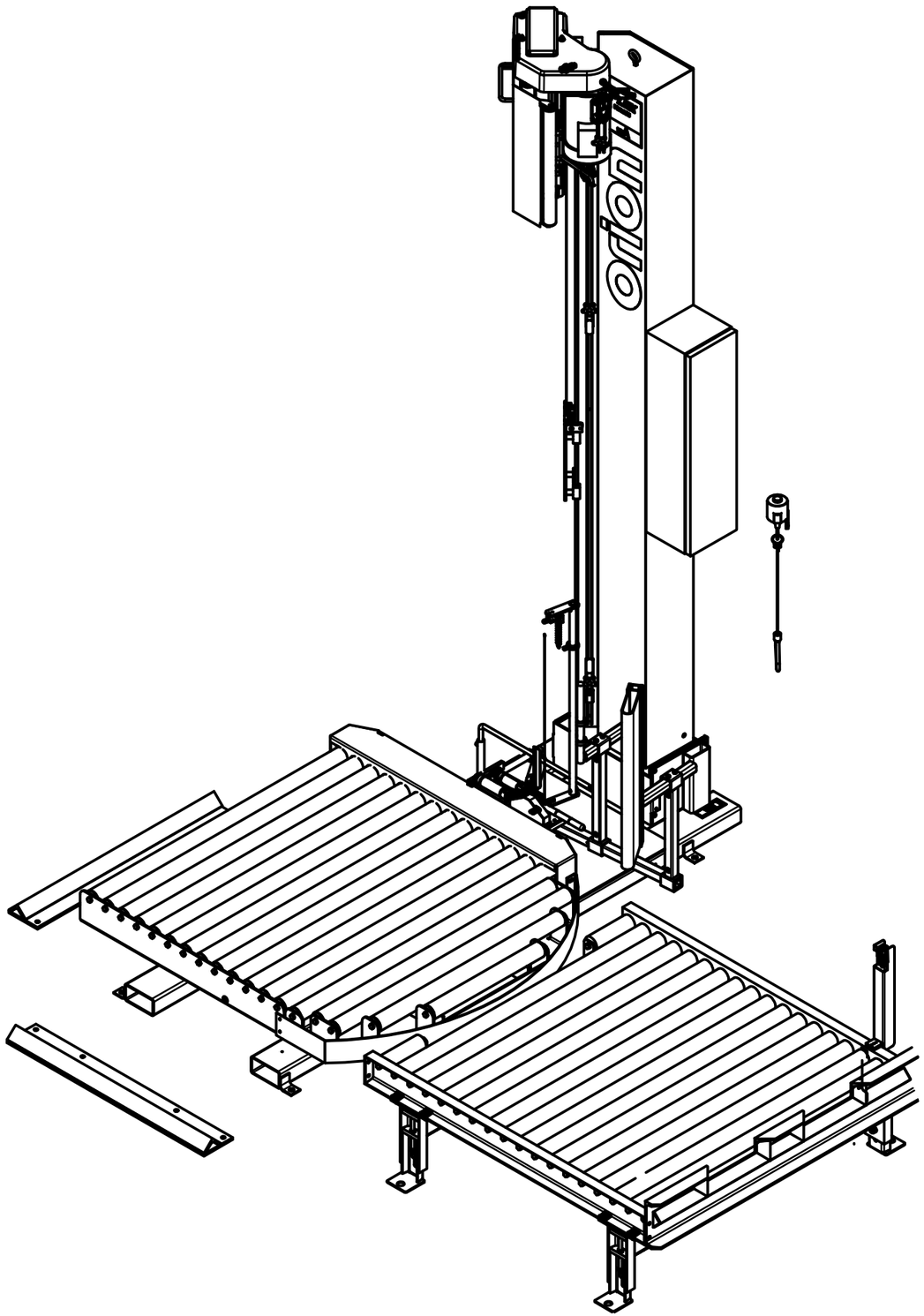

SH	DWGDESC	DWGDESC2	DWGDESC3
1	COVER PAGE		
2	115VAC POWER DROP	AND DISTRIBUTION	100/200
3	115VAC VFD		300/400
4	115VAC VFD		500/600
5	START/STOP CIRCUIT	AND REMOTE START	20100/20200
6	X20 I/O POWER /	INPUTS	30100/30200
7	X20 I/O OUTPUT /	POWER SUPPLY	30300/30400
8	X20 RS485 COMM		30500/30600
9	CARRIAGE I/O BLOCK		50100/50200
10	PNEUMATIC	SCHEMATIC	70100/70200
11	SPARE PAGE		
12	ENCLOSURES AND	PANEL AND BOM	
13	MACHINE FIELD AND	CARRIAGE BOM	

WIRING COLOR AND SIZE
115VAC (RED) 14 AWG MINIMUM
NEUTRAL (WHITE) 14 AWG MINIMUM
GND (GREEN/YELLOW) 14 AWG MINIMUM
+24VDC (BLUE) 18 AWG MINIMUM
DC COMMON (WHITE/BLUE) 18 AWG MINIMUM
CABLE COLORS AND GAUGE ARE LISTED IN PRINTS

NOTES
1. SILICONE BASE PRODUCTS SHALL NOT BE USED ANYWHERE IN THIS ASSEMBLY.
2. ALL FIELD CONTROL WIRE TO BE A MINIMUM 14 AWG 75C COPPER, UNLESS OTHERWISE NOTED.
3. ALL CONDUIT HUB RATINGS MUST BE EQUAL TO OR SURPASS THE ASSEMBLY ENVIRONMENT RATING.
4. WHEN ORDERING REPLACEMENT PARTS, PLEASE SUPPLY THE JOB NUMBER AS SHOWN INSIDE THE CONTROL PANEL DOOR.
5. MANUFACTURES OF COMPONENTS USED IN THIS ASSEMBLY ARE SUBJECT TO CHANGE WITHOUT NOTICE.
6. THIS DOCUMENT IS THE PROPERTY OF THE END USER, PLEASE DO NOT REMOVE FROM THE ELECTRICAL CONTROL ENCLOSURE.
7. ALL WIRES CONNECTED TO THE B&R X20 IO MUST HAVE FERRULS.

Brenton
4750 County Road 13 NE
Alexandria, MN 56308
PH 800-535-2730

NO.	DATE	REVISION	BY

DWG TITLE
FLEX (STANDARD) CTS

COVER PAGE

ENGINEER	CHECKED BY
JOB NO	DRAWN BY
SCALE NO SCALE	DATE 05/2016

DWG NO
744372(V1.0)

SHEET NO
1 OF 13

CAD DWG FILE I:\ELEC_ FLEX 10-2015\CTS B AND R\PG1.dwg

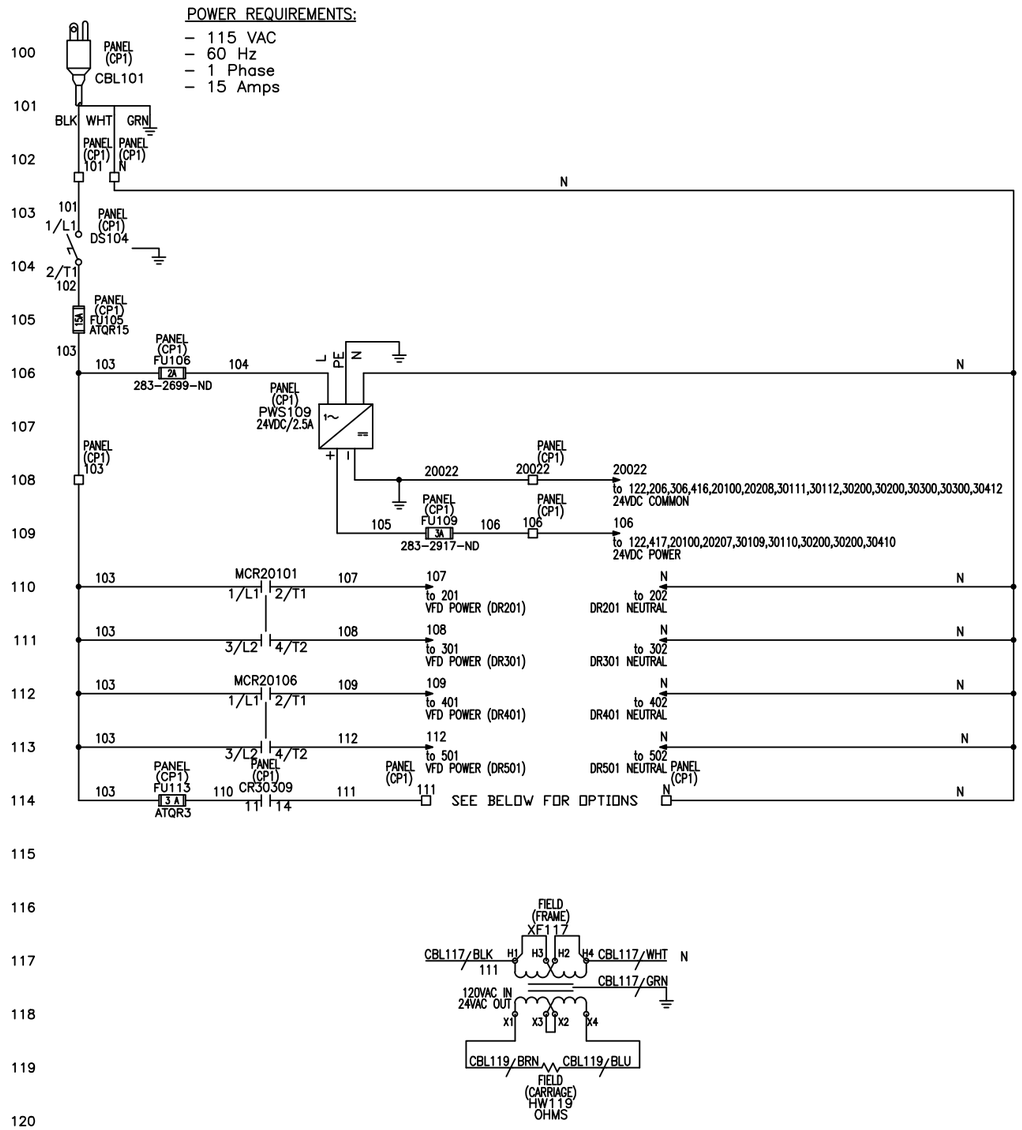

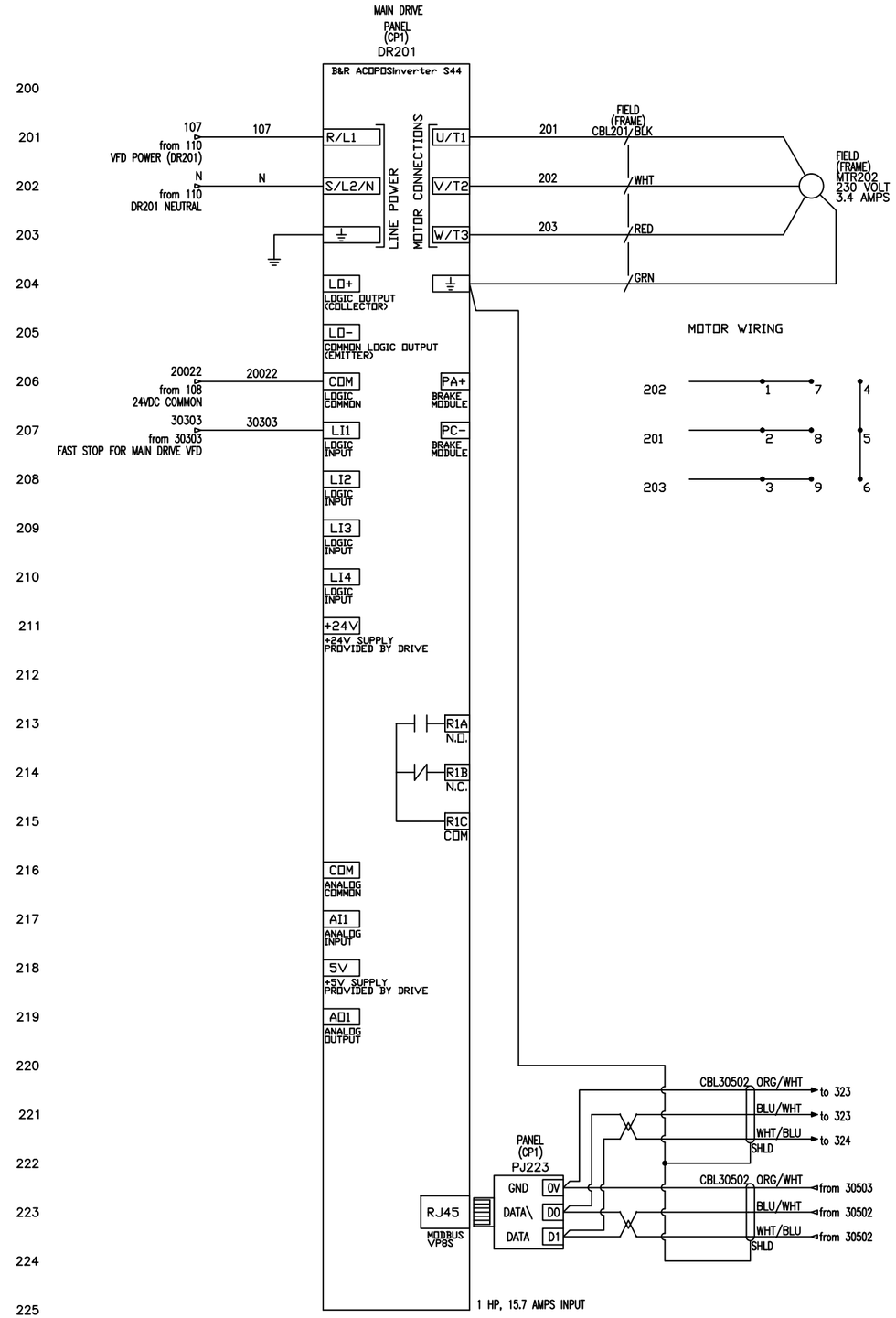

Brenton
4750 County Road 13 NE
Alexandria, MN 56308
PH 800-535-2730

NO.	DATE	REVISION	BY

DWG TITLE

FLEX (STANDARD) CTS

115VAC POWER DROP AND DISTRIBUTION

ENGINEER	CHECKED BY
JOB NO	DRAWN BY
SCALE NO SCALE	DATE 05/2016

DWG NO

744372(V1.0)

SHEET NO

2 OF 13

CAD DWG FILE I:\ELEC_ FLEX 10-2015\CTS B AND R\PG2.dwg

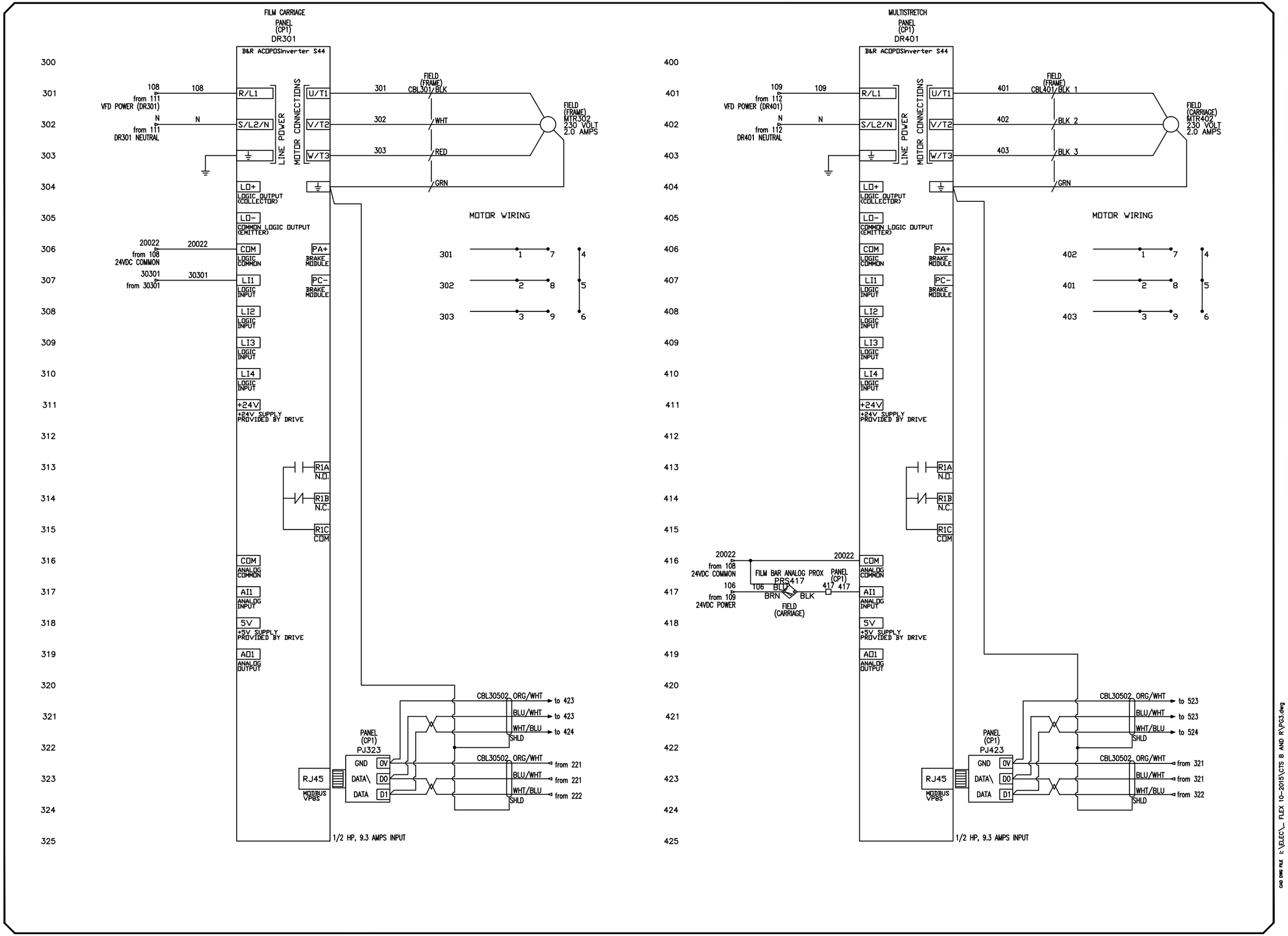

Brenton™
4750 County Road 13 NE
Alexandria, MN 56308
PH 800-535-2730

NO.	DATE	REVISION	BY

DWG TITLE
FLEX (STANDARD) CTS

115VAC VFD

ENGINEER	CHECKED BY
JOB NO	DRAWN BY
SCALE NO SCALE	DATE 05/2016

DWG NO
742372(V1.0)

SHEET NO
3 OF 13

CAD DWG FILE I:\ELEC_ FLEX 10-2015\CTS B AND R\PG3.dwg

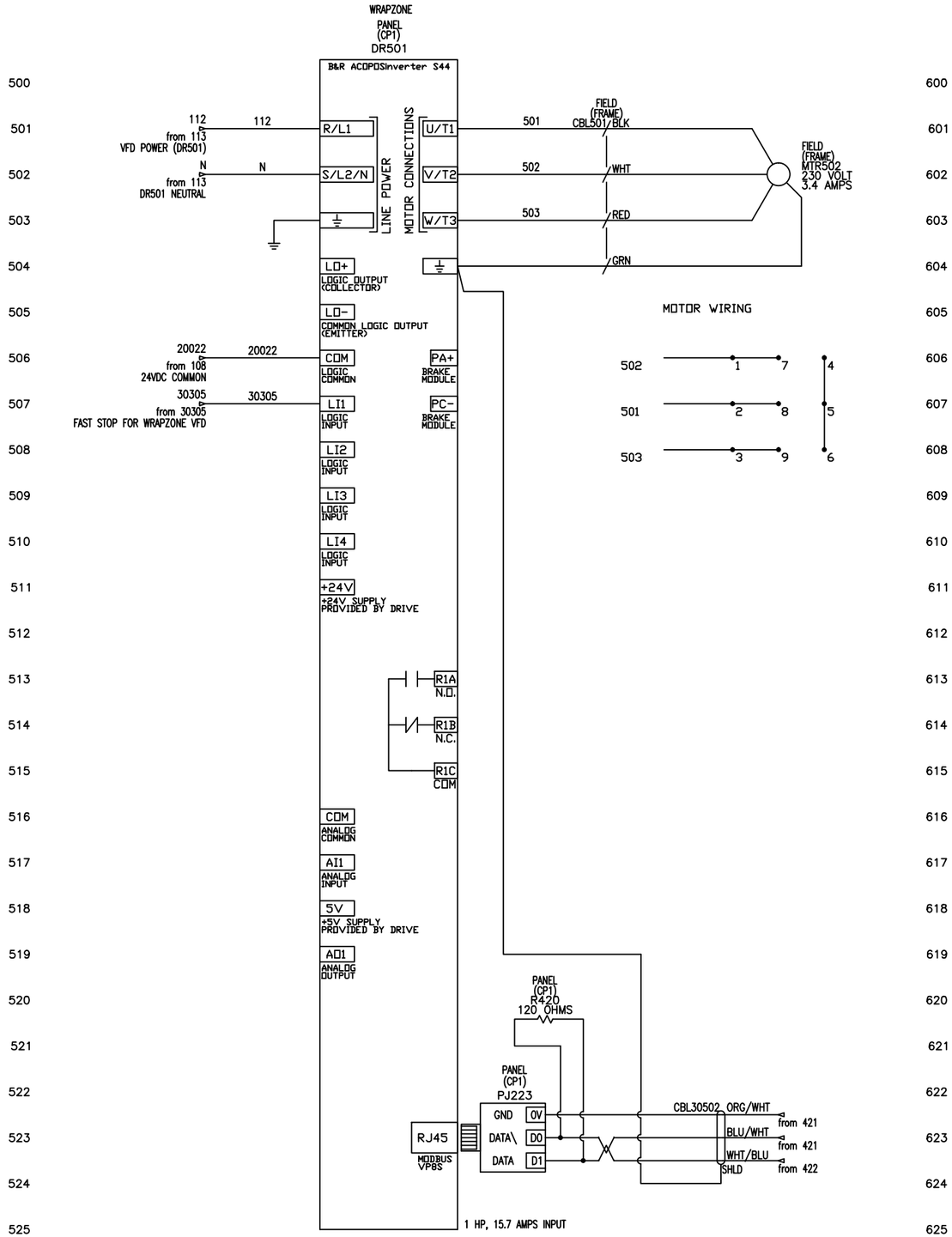

Brenton™
4750 County Road 13 NE
Alexandria, MN 56308
PH 800-535-2730

NO.	DATE	REVISION	BY

DWG TITLE
FLEX (STANDARD)
CTS

115 VAC VFD

ENGINEER	CHECKED BY
JOB NO	DRAWN BY
SCALE NO SCALE	DATE 05/2016

DWG NO
744372(V1.0)

SHEET NO
4 OF 13

CAD DWG FILE I:\ELEC_ FLEX 10-2015\CTS B AND R\PG4.dwg

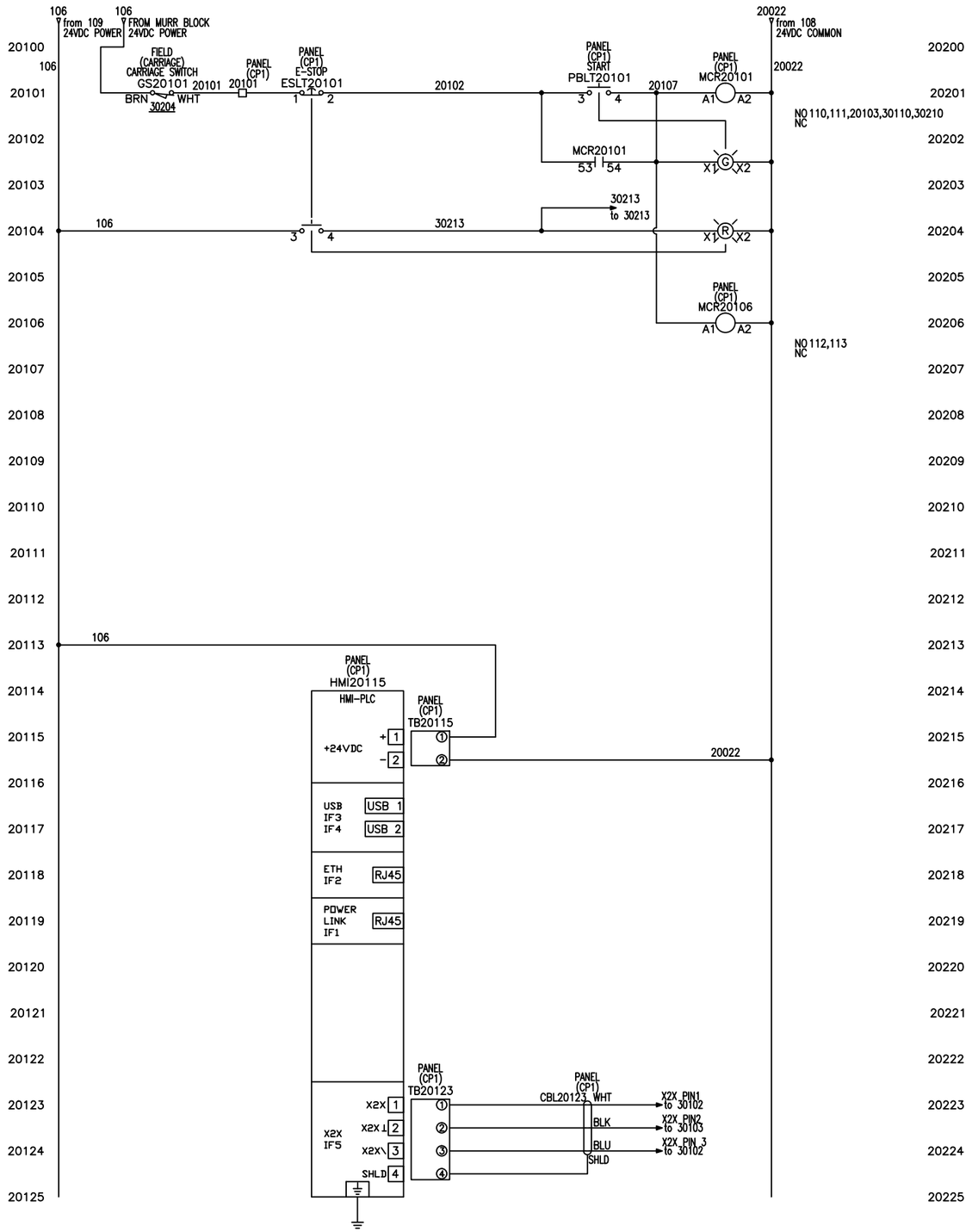

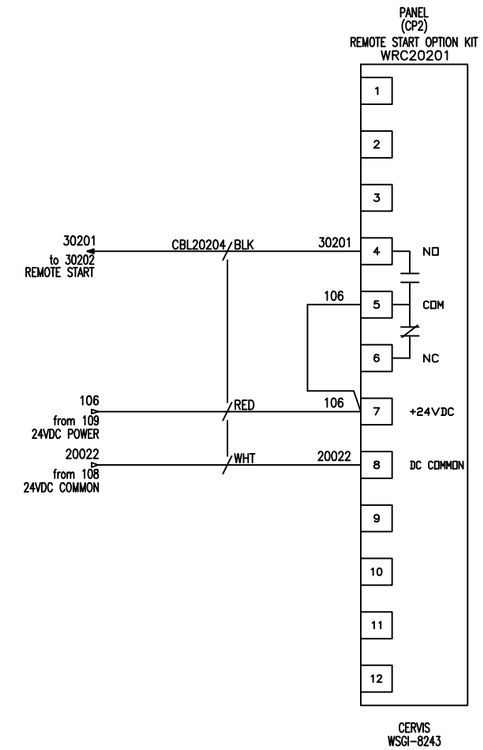

Brenton
4750 County Road 13 NE
Alexandria, MN 56308
PH 800-535-2730

NO.	DATE	REVISION	BY

DWG TITLE

FLEX (STANDARD) CTS

START/STOP CIRCUIT AND REMOTE START

ENGINEER	CHECKED BY
JOB NO	DRAWN BY
SCALE NO SCALE	DATE 05/2016

DWG NO

744372(V1.0)

SHEET NO

5 OF 13

CAD DWG FILE I:\ELEC_ FLEX 10-2015\CTS B AND R\PG5.dwg

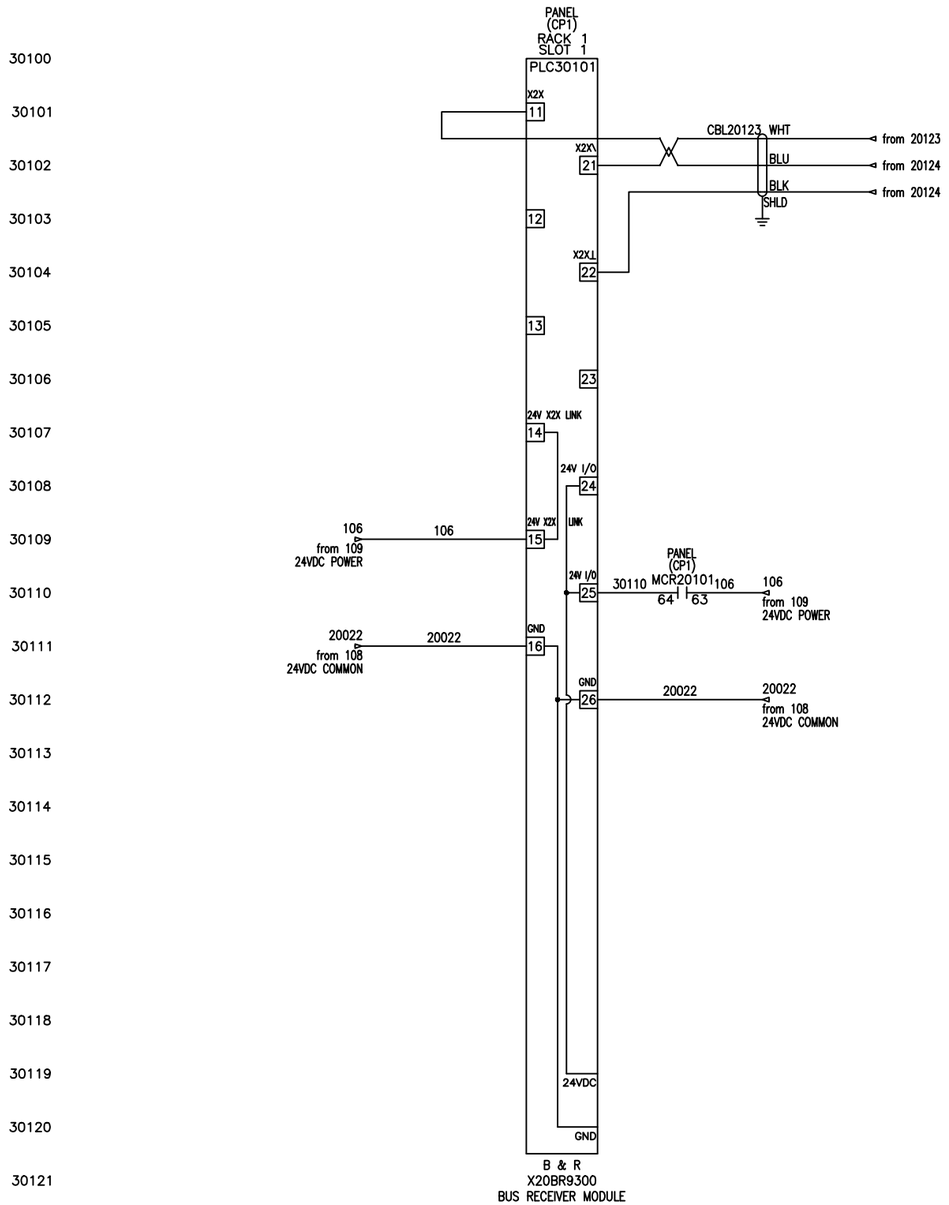

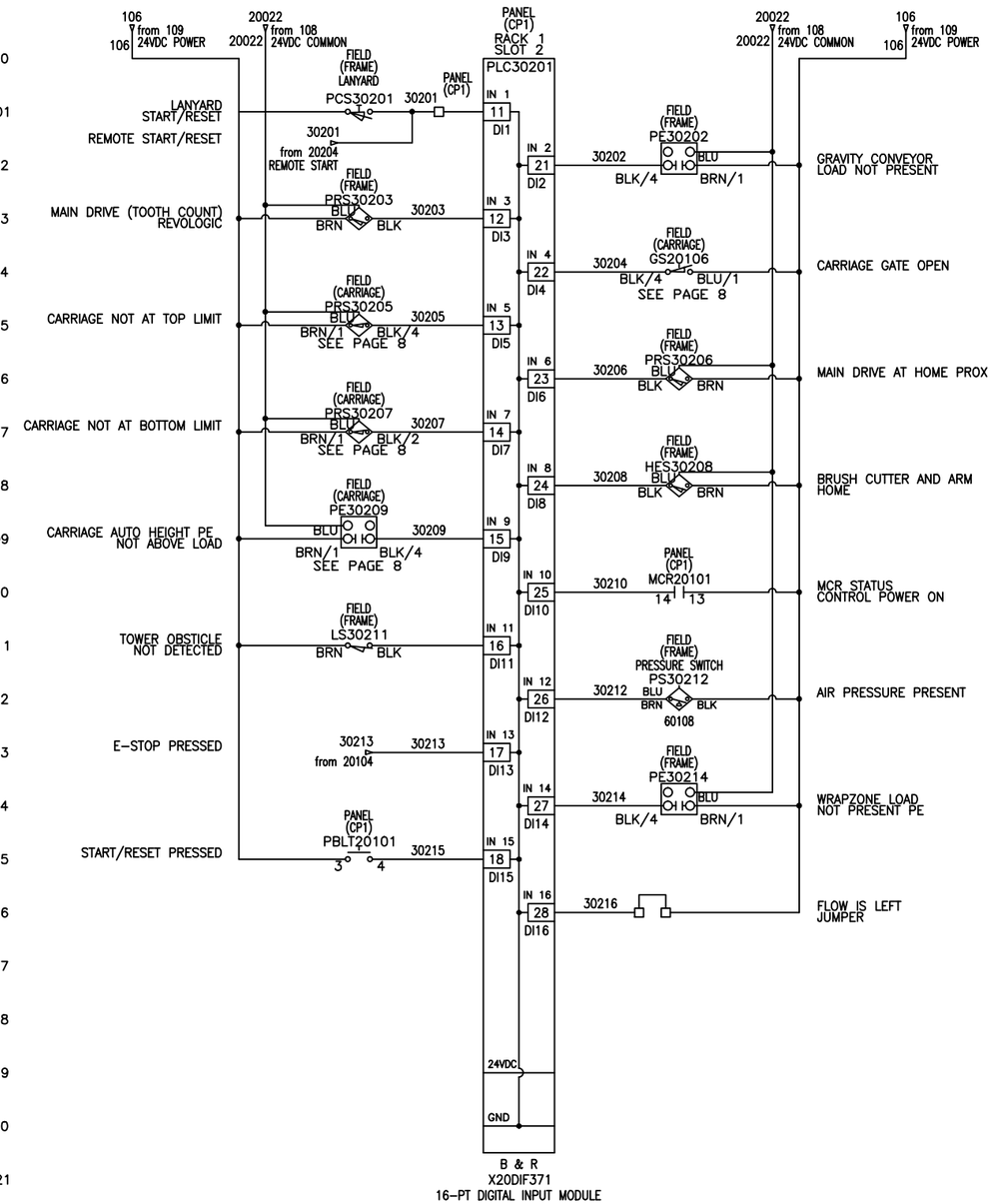

Brenton
4750 County Road 13 NE
Alexandria, MN 56308
PH 800-535-2730

NO.	DATE	REVISION	BY

DWG TITLE
FLEX (STANDARD) CTS
X20 I/O POWER / INPUTS

ENGINEER	CHECKED BY
JOB NO	DRAWN BY
SCALE NO SCALE	DATE 05/2016

DWG NO
744372(V1.0)

SHEET NO
6 OF 13

CAD DWG FILE I:\ELEC_ FLEX 10-2015\CTS B AND R\PG6.dwg

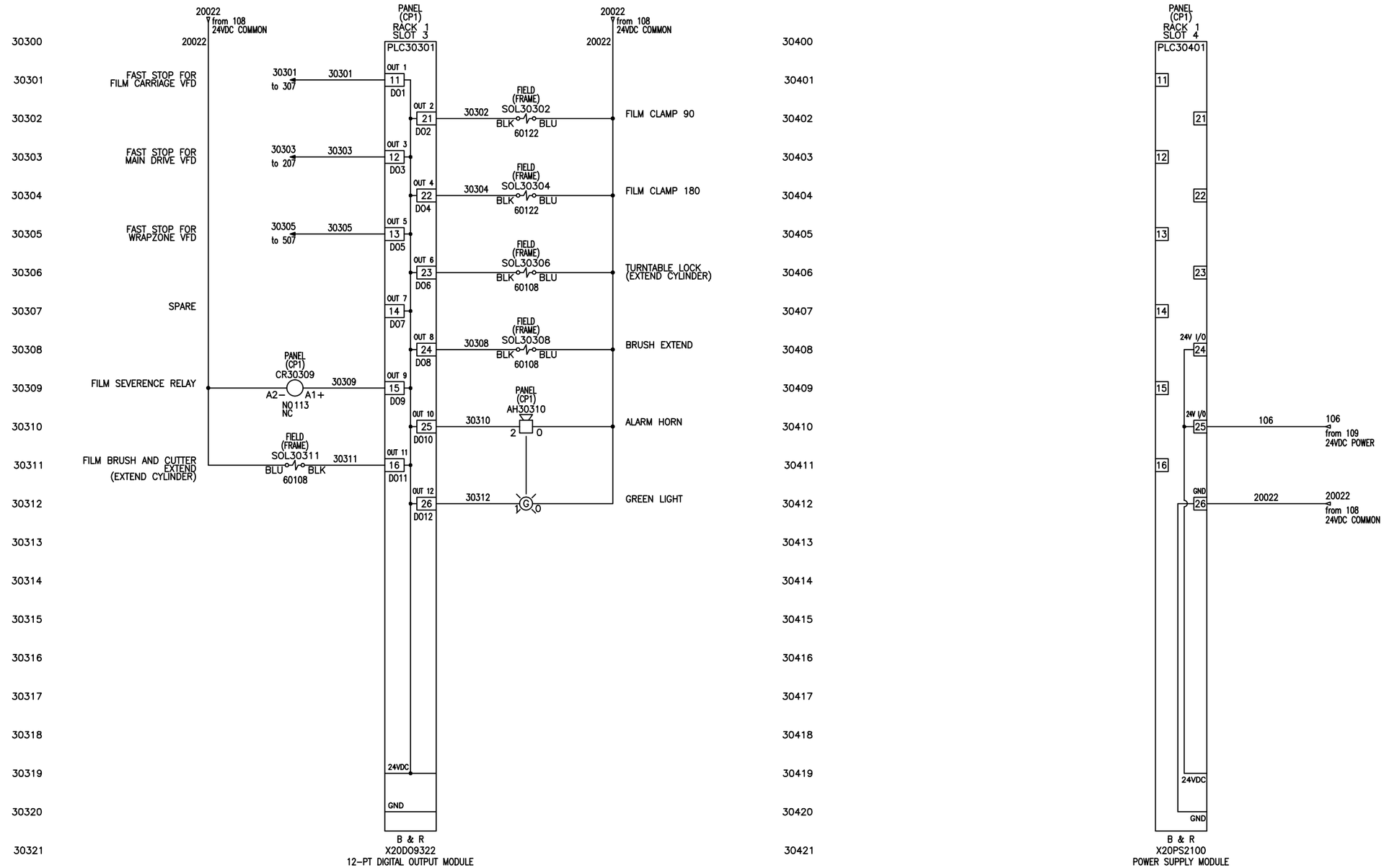

Brenton
4750 County Road 13 NE
Alexandria, MN 56308
PH 800-535-2730

NO.	DATE	REVISION	BY

DWG TITLE

FLEX (STANDARD) CTS

X20 I/O OUTPUT / POWER SUPPLY

ENGINEER	CHECKED BY
JOB NO	DRAWN BY
SCALE NO SCALE	DATE 05/2016

DWG NO

744372(V1.0)

SHEET NO

7 OF 13

CAD DWG FILE I:\ELEC_ FLEX 10-2015\CTS B AND R\PG7.dwg

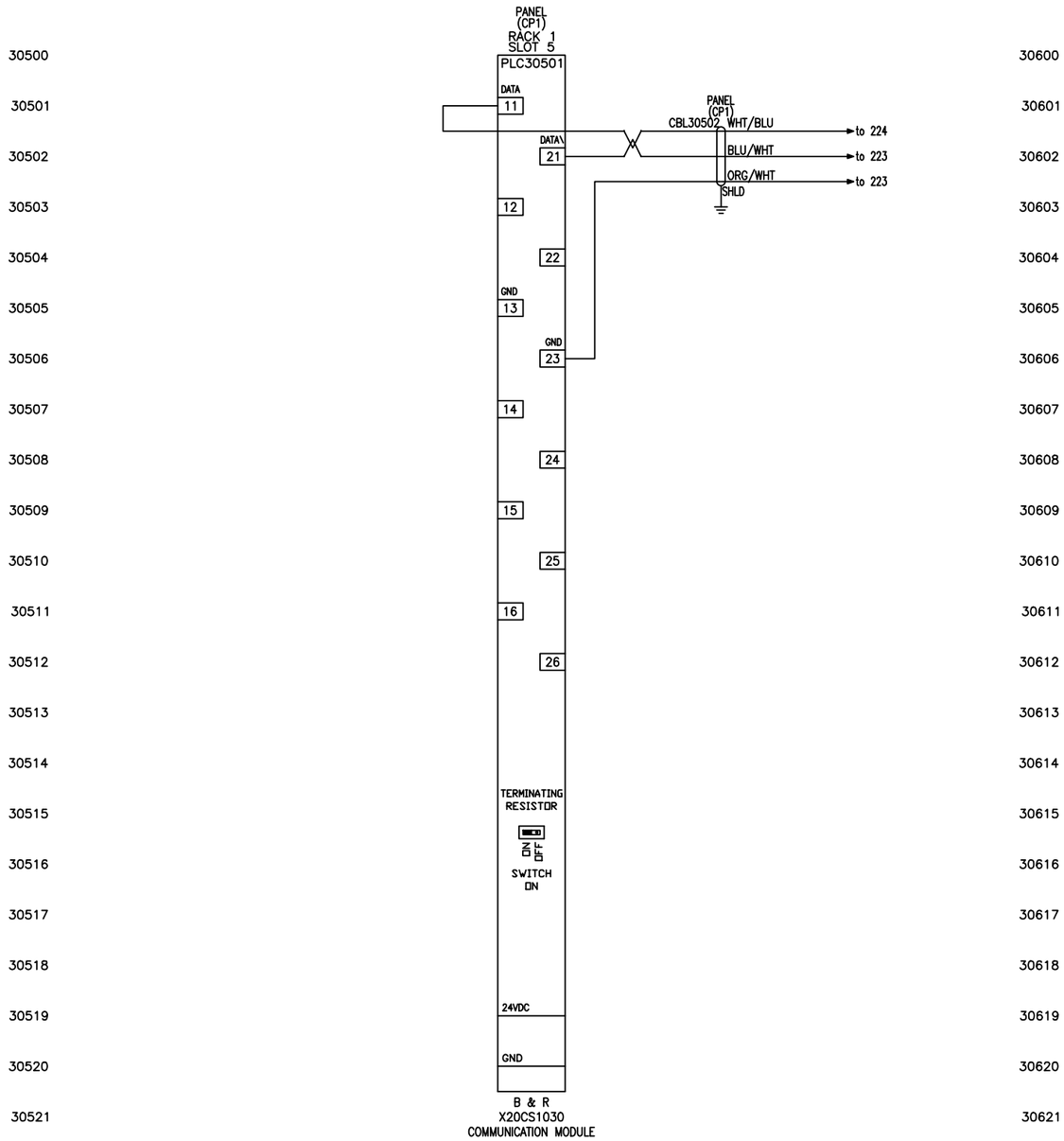

Brenton™
4750 County Road 13 NE
Alexandria, MN 56308
PH 800-535-2730

NO.	DATE	REVISION	BY

DWG TITLE
FLEX (STANDARD)
CTS

X20 RS485 COMM

ENGINEER	CHECKED BY
JOB NO	DRAWN BY
SCALE NO SCALE	DATE 05/2016

DWG NO
744372(V1.0)

SHEET NO
8 OF 13

CAD DWG FILE I:\ELEC_ FLEX 10-2015\CTS B AND R\PG8.dwg

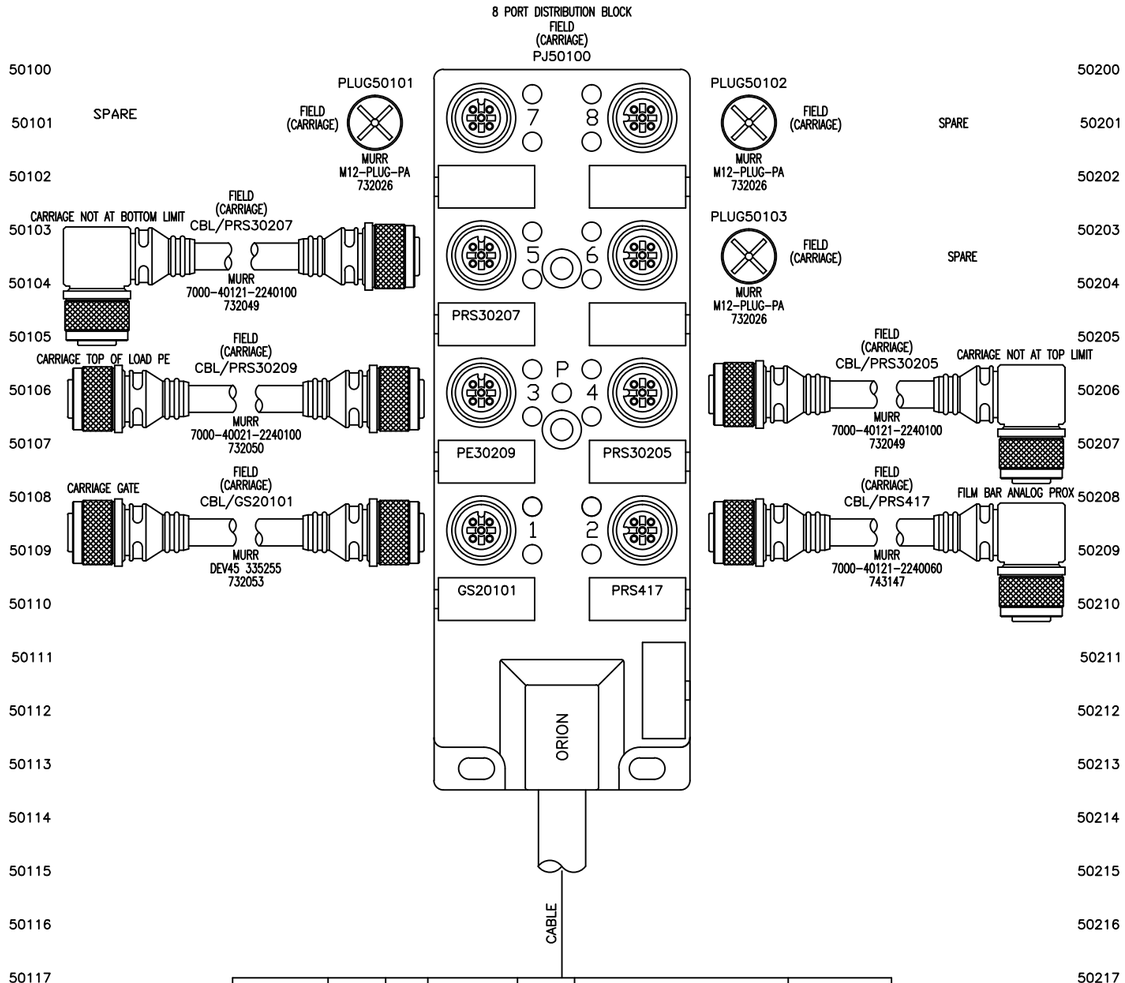

WIRE COLOR	PORT#	PIN#	DEVICE TAG	WIRE#	DESCRIPTION	I/O ADDRESS
WHITE	1	4	GS20101	30204	CARRIAGE GATE OPEN	
GRY/PNK	1	2	GS20101	20101	CARRIAGE GATE CLOSED	
GREEN	2	4				
RED/BLU	2	2	PRS417	417	ANALOG PROX	
YELLOW	3	4	PE30209	30209	CARRIAGE AUTO HEIGHT	
WHT/GRN	3	2				
GRAY	4	4				
BRN/GRN	4	2	PRS30205	30205	CARRIAGE TOP LIMIT	
PINK	5	4				
WHT/YEL	5	2	PRS30207	30207	CARRIAGE BOTTOM LIMIT	
RED	6	4				
YEL/BRN	6	2				
BLACK	7	4				
WHT/GRY	7	2				
VIOLET	8	4				
GRY/BRN	8	2				
BROWN	1 – 8	1		106	24VDC +	
BLUE	1 – 8	3		20022	0VDC –	
GRN/YEL	1 – 8	5		GND	GROUND	

SLIP RING

PORT	WIRE #	FIXED SIDE	WIRE COLOR	ROTARY SIDE	WIRE #	DEVICE TAG	DEVICE NAME
1	GND	S1	WHITE	R1	GND	MTR502	GROUND
1	501	S2	WHITE	R2	501	MTR502	WRAPZONE
1	502	S3	WHITE	R3	502	MTR502	WRAPZONE
1	503	S4	WHITE	R4	503	MTR502	WRAPZONE
1	SPARE1	S5	WHITE	R5	SPARE1		
1	SPARE2	S6	WHITE	R6	SPARE2		
1	SPARE3	S7	WHITE	R7	SPARE3		
2	106	S8	WHITE	R8	106		+24VDC
2	20022	S9	WHITE	R9	20022		DC COMMON
2	30302	S10	WHITE	R10	30302	SOL30302	FILM CLAMP 90
2	30304	S11	WHITE	R11	30304	SOL30304	FILM CLAMP 180
2	SPARE4	S12	WHITE	R12	SPARE4		
2	SPARE5	S13	WHITE	R13	SPARE5		
2	SPARE6	S14	WHITE	R14	SPARE6		
2	SPARE7	S15	WHITE	R15	SPARE7		
2	SPARE8	S16	WHITE	R16	SPARE8		
2	SPARE9	S17	WHITE	R17	SPARE9		
2	SPARE10	S18	WHITE	R18	SPARE10		

Brenton
4750 County Road 13 NE
Alexandria, MN 56308
PH 800-535-2730

NO.	DATE	REVISION	BY

DWG TITLE
FLEX (STANDARD)
CTS

CARRIAGE I/O BLOCK

ENGINEER | CHECKED BY
JOB NO | DRAWN BY
SCALE NO SCALE | DATE 05/2016
DWG NO 744372(V1.0)
SHEET NO 9 OF 13

CAD DWG FILE I:\ELEC_ FLEX 10-2015\CTS B AND R\PG9.dwg

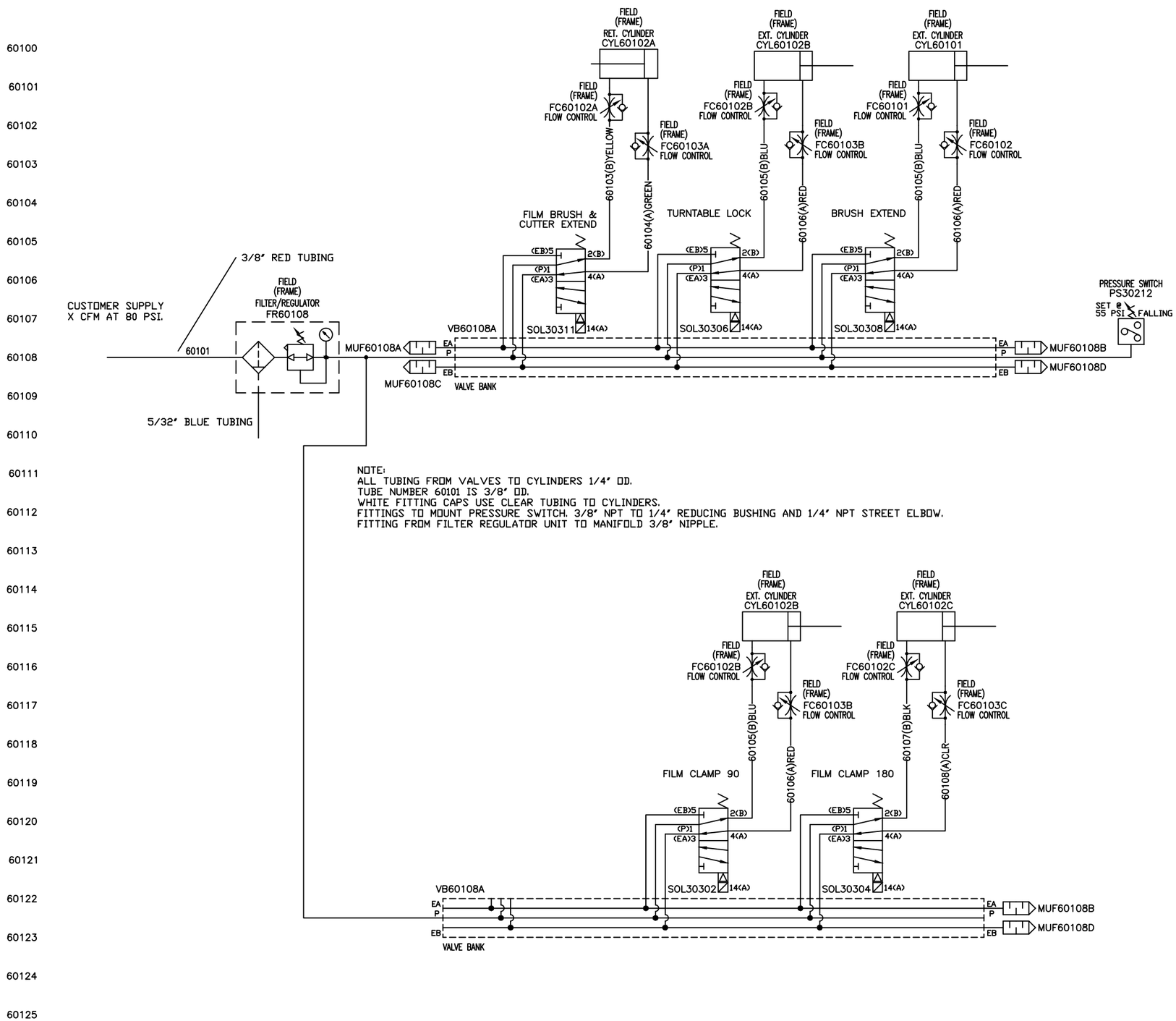

Brenton
4750 County Road 13 NE
Alexandria, MN 56308
PH 800-535-2730

NO.	DATE	REVISION	BY

DWG TITLE

FLEX (STANDARD) CTS

PNEUMATIC SCHEMATIC

ENGINEER	CHECKED BY
JOB NO	DRAWN BY
SCALE NO SCALE	DATE 05/2016

DWG NO

744372(V1.0)

SHEET NO

10 OF 13

CAD DWG FILE I:\ELEC_ FLEX 10-2015\CTS B AND R\PG10.dwg

70100
70101
70102
70103
70104
70105
70106
70107
70108
70109
70110
70111
70112
70113
70114
70115
70116
70117
70118
70119
70120
70121
70122
70123
70124
70125

70200
70201
70202
70203
70204
70205
70206
70207
70208
70209
70210
70211
70212
70213
70214
70215
70216
70217
70218
70219
70220
70221
70222
70223
70224
70225

Brenton™
4750 County Road 13 NE
Alexandria, MN 56308
PH 800-535-2730

NO.	DATE	REVISION	BY

DWG TITLE
FLEX (STANDARD) CTS

SPARE PAGE

ENGINEER	CHECKED BY
JOB NO	DRAWN BY
SCALE NO SCALE	DATE 05/2016

DWG NO
744372(V1.0)

SHEET NO
11 OF 13

CAD DWG FILE I:\ELEC_ FLEX 10-2015\CTS B AND R\PG11.dwg

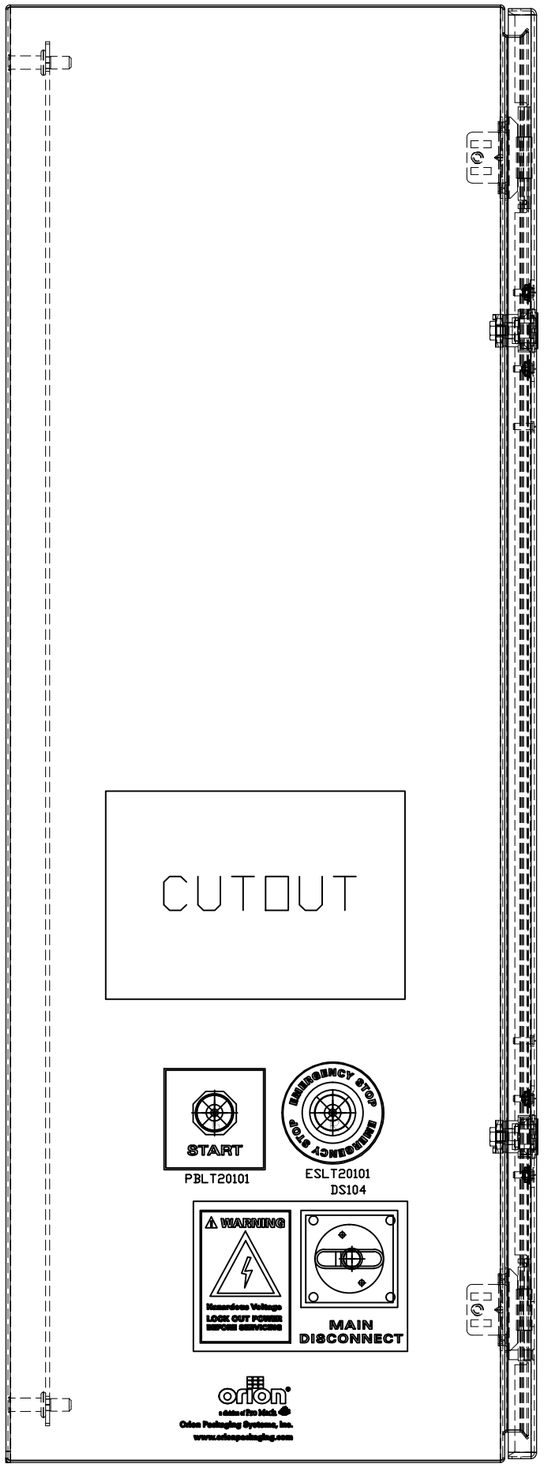

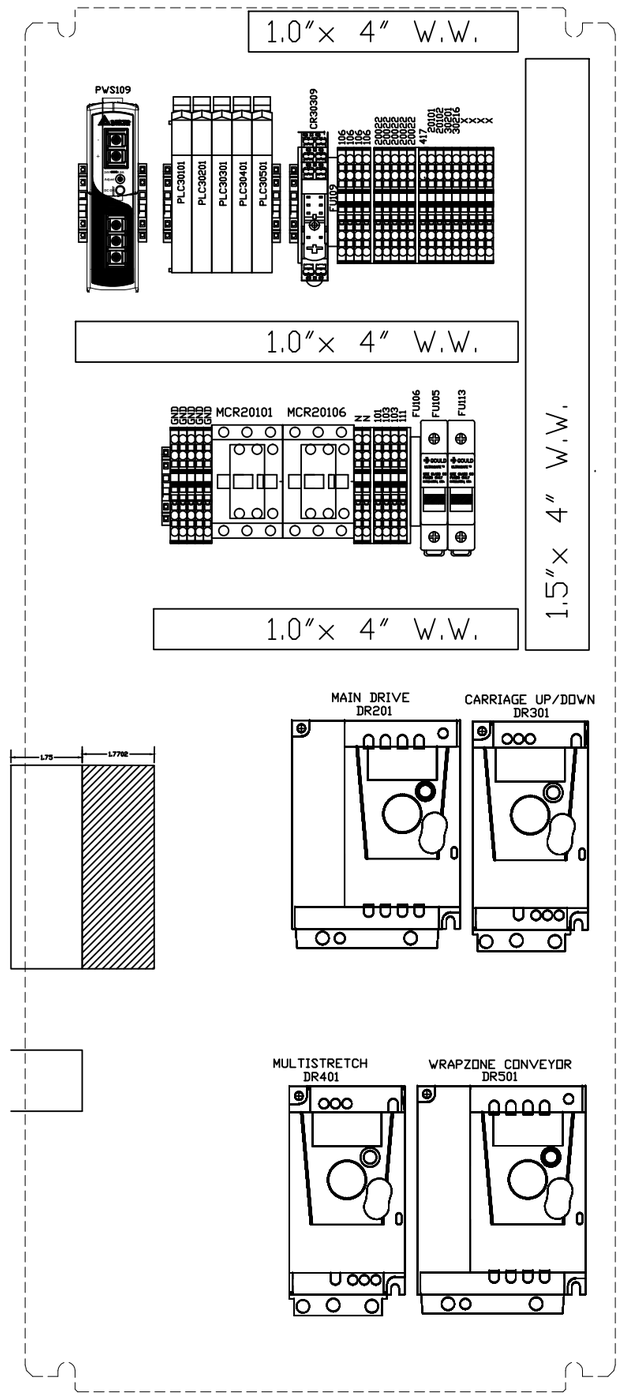

TAGS	QTY	SUB	ASSYCODE	MFG	CATALOG
AH30310	1		729175	AB	EC-B24D3P1
CBL101	1		738880	QUAIL ELECTRINICS	5040.180
CR30309	1		742987	PHOENIX	2903334
DR301 DR401	2		742975	B&R	8I44S100037.000-1
DR201 DR501	2		742976	B&R	8I44S100075.000-1
DS104	1		742978	EATON	P1-25/EA/SVB
TB20123	1		738894	B & R	OTB5104.2110-01
TB20115	1		738883	B & R	OTB6102.2110-01
HMI20115	1		743000	B & R	4PPC70.0702-20B
PJ223 PJ323 PJ423	4		743142	B & R	8I0XC002.100.1
FU113	1	*1	742985	EATON	C383FHMD
		*1	731039	LITTELFUSE	KLDR003
FU105	1	*1	742985	EATON	C383FHMD
		*1	731049	LITTELFUSE	KLDR015
FU109	1	*1	742986	PHOENIX	3211861
		*1	742989	DIGITKEY	283-2917-ND (BK/GMD-3-R)
FU106	1	*1	742986	PHOENIX	3211861
		*1	742988	DIGITKEY	283-2699-ND (BK/S506-2-R)
MCR20101	1	*1	742979	EATON	XTCE009B10TD
		*1	742980	EATON	XTCEXFAC20
PBLT20101	1	*1	742983	EATON	M22-DL-G
		*2	737822	EATON	M22-K10
		*1	742983	EATON	M22-DL-G
		*1	732103	EATON	M22-LED-G
ESLT20101	1	*1	742981	EATON	M22-PVL
		*1	737822	EATON	M22-K10
		*1	742982	EATON	M22-K01
		*1	742984	EATON	M22-LED-R
PLC30101	1	*1	731535	B & R	X20BR9300
		*1	742087	B & R	X20BM01
		*1	742088	B & R	X20TB12
PLC30501	1	*1	738900	B & R	X20CS1030
		*1	742083	B & R	X20BM11
		*1	742088	B & R	X20TB12
PLC30201	1	*1	742084	B & R	X20DIF371
		*1	742083	B & R	X20BM11
		*1	742082	B & R	X20TB1F
PLC30301	1	*1	742996	B & R	X20DO9322
		*1	742083	B & R	X20BM11
		*1	742088	B & R	X20TB12
PLC30401	1	*1	738899	B & R	X20PS2100
		*1	742087	B & R	X20BM01
		*1	742088	B & R	X20TB12
PWS109	1		742977	DELTA	DRP024V060W1AZ
R420	1		ANY	120 OHM	0.25 W
	6		742993	PHOENIX	3209578
	1		742994	PHOENIX	3209594
CBL30502	8		743145	HARTFIEL	THC50961
CBL20123	2		743144	HARTFIEL	THC50967

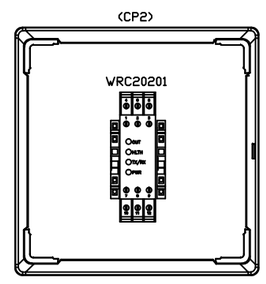

TAGS	QTY	SUB	ASSYCODE	MFG	CATALOG
WRC20201	1	*1	741591	CERVIS	WSGI-8243
		*1	731782	CERVIS	SMART-901R-24V-WSGI-8243 (3175124)
		*1	729265	CARLON	E987R (105436)
		*2	740238	LAPP	S2509 (1578387)
		*10	098087	BELDEN	8489 18/4C
		*1	741594	OMEGA	3FAL1 (1992537)
		*2	741595	CH	XBA3ES35C (2243439)

Brenton
4750 County Road 13 NE
Alexandria, MN 56308
PH 800-535-2730

NO.	DATE	REVISION	BY

DWG TITLE
FLEX (STANDARD) CTS

ENCLOSURES AND PANEL AND BOM

ENGINEER | CHECKED BY
JOB NO | DRAWN BY
SCALE: NO SCALE | DATE: 05/2016
DWG NO: 744372(V1.0)
SHEET NO: 12 OF 13

CAD DWG FILE: I:\ELEC_ FLEX 10-2015\CTS B AND R\PG12.dwg

FIELD FRAME BOM

TAGS	QTY	SUB	ASSYCODE	MFG	CATALOG
FC60103C	1	*1	735512	SMC	AS2201F-N01-07SD
		*1	743171	SMC	KQ2C-07W-B
FC60102C	1	*1	735512	SMC	AS2201F-N01-07SD
		*1	743170	SMC	KQ2C-07B-B
FC60102A FC60103B	3	*1	735512	SMC	AS2201F-N01-07SD
		*1	743172	SMC	KQ2C-07R-B
FC60102B FC60103A	3	*1	735512	SMC	AS2201F-N01-07SD
		*1	743169	SMC	KQ2C-07BU-B
FR60108	1		728999	SMC	AW20-N02CE-CZ-B
CYL60102A CYL60102B CYL60102C MTR202 MTR302 MTR502	7		SEE	MECHANICAL	BOM
PCS30201	1		017065	REES	04958-100
HES30208	1	*1	731131	FESTO	152820/SME-8-K-LED-230
		*1	731132	FESTO	538937/SMBR-8-8/100-S6
PRS30206	1	*1	SEE	LISTED	OPTIONS
		*1	712551 (LPD/LPA)	SICK	1040780/IME12-08NPSZC0S
		*1	728707 (HPD/HPA)	SICK	1041046/IME30-20NPSZC0S
		*1	738870	MURR	7000-12221-0140500
PRS30203	1	*1	729895	SICK	1040764/IME12-04BPSZC0S
		*1	738870	MURR	7000-12221-0140500
PS30212	1		721162	SMC	IS10-N01-6LP
SOL30302 SOL30304 SOL30308 SOL30311	4		728593	SMC	SY5120-5W0Z-N7T
CBL20204	1	*10	098087	BELDEN	8489 18/4C
CBL119	1	*0	743010	CABLE	18/2 SJOOW
CBL117	1	*0	727500	CABLE	18/3 SJEOOW
CBL401	1	*0	739676	LUTZE	111371
CBL201 CBL301 CBL501	3	*0	730915	SOUTH WIRE	16/4 SLEOOW
XF117	1		019387	SQUARE D	250SV43B

FIELD CARRIAGE BOM

TAGS	QTY	SUB	ASSYCODE	MFG	CATALOG
CBL/GS20101	1		732053	MURR	DEV45 335255
PLUG50101 PLUG50102 PLUG50103	3		732026	MURR	M12-PLUG-PA
CBL/PRS30209	1		732050	MURR	7000-40021-2240100
CBL/PRS417	1		743147	MURR	7000-40121-2240060
CBL/PRS30205 CBL/PRS30207	2		732049	MURR	7000-40121-2240100
PJ50100	1		732045	MURR	8000-88510-3980500
GS20101	1		739147	SICK	1059505/RE21-SAC
PE30202 PE30209 PE30214	3	*1	SEE	LISTED	OPTIONS
		*1	729603 (STANDARD)	SICK	1025905/WT18-3P420
		*1	729206 (TIME DELAY)	SICK	1027753/WTB27-3F2411
		*1	731972 (DARK LOAD)	SICK	1019229/WT34-B410
		*1	731971 (DARK LOAD TIME DELAY)	SICK	1019230/WT34-B420
		*1	730312 (LONG RANGE)	SICK	1016933/WT24-2B410
PRS417	1		731785	IFM	IG6083
PRS30205 PRS30207	2		731955	SICK	1041033/IME30-15BP0-ZC0K
HW119 MTR402	2		SEE	MECHANICAL	BOM

Brenton
4750 County Road 13 NE
Alexandria, MN 56308
PH 800-535-2730

NO.	DATE	REVISION	BY

DWG TITLE
FLEX (STANDARD) CTS

MACHINE FIELD AND CARRIAGE BOM

ENGINEER	CHECKED BY
JOB NO	DRAWN BY
SCALE NO SCALE	DATE 05/2016
DWG NO *744372(V1.0)*	
SHEET NO *13 OF 13*	

CAD DWG FILE I:\ELEC_ FLEX 10-2015\CTS B AND R\PG13.dwg